NEW PRODUCTS 2019
BRISTON WATCHES

LAUNCH PLAN 2019

CLUBMASTER LADY
Acetate & Steel

APRIL 2019
8 references

CLUBMASTER GMT
Acetate & Steel

JUNE 2019
8 references
Special edition of 500 pieces

CLUBMASTER ICONIC
Acetate et PVD / Sunray dials of colors,

CLUBMASTER ICONIC
Acetate & PVD

SEPTEMBER 2019
16 references

FIRST PERIOD

SECOND PERIOD

THIRD PERIOD

BRISTON

CLUBMASTER
LADY

NEW PRODUCTS
APRIL 2019

BRISTON

LAUNCH PLAN – APRIL 2019

CLUBMASTER LADY

Acetate & Full Steel case

APRIL 2019

8 references

April — May

BRISTON

THE NEW CLUBMASTER LADY

- Create a watch "jewel" with our rounded curved and introduce a new small 24mm case size suitable for feminine wrists
- Expand the Clubmaster range & meet the growing demand for thin, simple and small watches
- Generate business (volume maker) & PR opportunities (Brand awareness) by offering a product at an affordable price of 185$
- The particularity of this model lies in its case adorned with a black onyx cabochon, We made the choice of simplicity & classicism as this new collection is equipped with the Japanese Quartz Movement Miyota GL20 displayed by sword-shaped hours & minutes hands
- Finally, we decided to introduce the Clubmaster LADY on interchangeable double turn NATO straps that adds sophistication to this collection.

New accessories:

- Single turn NATO straps 230mm & 12mm of width, a palette of twelve plain colors is proposed in both steel and rose gold PVD buckles.
- Double turns NATO 390mm & 12mm of width, a palette of twelve plain colors is proposed in both steel and rose gold PVD buckles.
- Single & double turns 2-part leather straps (12mm) in glossy imitation alligator including real brown calf leather in both steel and rose gold PVD buckles. Interchangeable, they are equipped with an easy pins system to remove the strap.
- Milanese mesh bands (single and double turns) with presto system will complete our range of accessories on the collection Clubmaster LADY

Launch date: April 2019
8 references of watches
88 references of accessories

BRISTON

THE MOVEMENT & DIAL

Specificities of the Clubmaster LADY:

- 24x24mm case in tortoise shell acetate / polished steel or stainless steel with rose gold PVD treatment
- Small watch equipped with the HM movement GL20 (Japanese Quartz) manufactured by Citizen.
- Power reserve of the quartz movement = 5 years
- Crown adorned with black onyx cabochon

Dial opening of 18,5mm

Polished sword-shaped hours hand

Polished sword-shaped minutes hand

Crown adorned with black onyx cabochon

Clubmaster LADY

Clubmaster LADY
19924.SA.T.1.NB
NEW PRODUCT APRIL 2019

Case
Size: 24 x 24 mm
Opening Dial: 18,5 mm
Thickness: 7,30 mm
Italian tortoise shell Acetate: handmade polished finish
Lugs/ Bezel/ Crown/ screw-down Back: polished 316L stainless steel
Crown set with a black onyx cabochon
Domed mineral crystal - 1.8 mm thickness
Water resistance to:50m/5 ATM

Movement
Quartz Citizen caliber: Miyota GL20
Power reserve of 5 years
Functions: Hours Minutes

Dial
black semi-glossy

Hands
Rhodium-plated "sword" shaped Hour & Minutes hands

Strap
Interchangeable black stitched NATO nylon strap: water resistant & washable – length: 390mm / width: 12 mm
Special double turn NATO strap with moveable loop
Exclusive BRISTON logo on 1st loop
Polished 316L stainless steel pin buckle & Loops

BRISTON

Clubmaster LADY

Clubmaster LADY
19924.SA.T.2.NT
NEW PRODUCT APRIL 2019

Case
Size: 24 x 24 mm
Opening Dial: 18,5 mm
Thickness: 7,30 mm
Italian tortoise shell Acetate: handmade polished finish
Lugs/ Bezel/ Crown/ screw-down Back: polished 316L stainless steel
Crown set with a black onyx cabochon
Domed mineral crystal - 1.8 mm thickness
Water resistance to:50m/5 ATM

Movement
Quartz Citizen caliber: Miyota GL20
Power reserve of 5 years
Functions: Hours Minutes

Dial
White-silvered semi-glossy

Hands
Rhodium-plated "sword" shaped Hour & Minutes hands

Strap
Interchangeable taupe stitched NATO nylon strap: water resistant & washable – length: 390mm / width: 12 mm
Special double turn NATO strap with moveable loop
Exclusive BRISTON logo on 1st loop
Polished 316L stainless steel pin buckle & Loops

BRISTON

Clubmaster LADY

Clubmaster LADY
19924.PRA.T.1.NB
NEW PRODUCT APRIL 2019

Case
Size: 24 x 24 mm
Opening Dial: 18,5 mm
Thickness: 7,30 mm
Italian tortoise shell Acetate: handmade polished finish
Lugs/ Bezel/ Crown/ screw-down Back: polished 316L stainless steel with rose gold PVD treatment
Crown in rose gold set with a black onyx cabochon
Domed mineral crystal - 1.8 mm thickness
Water resistance to:50m/5 ATM

Movement
Quartz Citizen caliber: Miyota GL20
Power reserve of 5 years
Functions: Hours Minutes

Dial
black semi-glossy

Hands
Rose gold plated "sword" shaped Hour & Minutes hands

Strap
Interchangeable black stitched NATO nylon strap: water resistant & washable – length: 390mm / width: 12 mm
Special double turn NATO strap with moveable loop
Exclusive BRISTON logo on 1st loop
Polished 316L stainless steel with rose gold PVD treatment pin buckle & Loops

BRISTON

Clubmaster LADY

Clubmaster LADY
19924.PRA.T.2.NT
NEW PRODUCT APRIL 2019

Case
Size: 24 x 24 mm
Opening dial: 18,5 mm
Thickness: 7,30 mm
Italian tortoise shell Acetate: handmade polished finish
Lugs/ Bezel/ Crown/ screw-down Back: polished 316L stainless steel with rose gold PVD treatment
Crown in rose gold set with a black onyx cabochon
Domed mineral crystal - 1.8 mm thickness
Water resistance to:50m/5 ATM

Movement
Quartz Citizen caliber: Miyota GL20
Power reserve of 5 years
Functions: Hours Minutes

Dial
White-silvered semi-glossy

Hands
Rose gold plated "sword" shaped Hour & Minutes hands

Strap
Interchangeable taupe stitched NATO nylon strap: water resistant & washable – length: 390mm / width: 12 mm
Special double turn NATO strap with moveable loop
Exclusive BRISTON logo on 1st loop
Polished 316L stainless steel with rose gold PVD treatment pin buckle & Loops

BRISTON

Clubmaster LADY

Clubmaster LADY
19924.S.M.1.NB
NEW PRODUCT APRIL 2019

Case
Size: 24 x 24 mm
Opening Dial: 18,5 mm
Thickness: 7,30 mm
Full mirror-polished 316L stainless steel case
Lugs/ Bezel/ Crown/ screw-down Back: polished 316L stainless steel
Crown set with a black onyx cabochon
Domed mineral crystal - 1.8 mm thickness
Water resistance to:50m/5 ATM

Movement
Quartz Citizen caliber: Miyota GL20
Power reserve of 5 years
Functions: Hours Minutes

Dial
black semi-glossy

Hands
Rhodium-plated "sword" shaped Hour & Minutes hands

Strap
Interchangeable black stitched NATO nylon strap: water resistant & washable – length: 390mm / width: 12 mm
Special double turn NATO strap with moveable loop
Exclusive BRISTON logo on 1st loop
Polished 316L stainless steel pin buckle & Loops

BRISTON

Clubmaster LADY

Clubmaster LADY
19924.S.M.2.NT
NEW PRODUCT APRIL 2019

Case
Size: 24 x 24 mm
Opening Dial: 18,5 mm
Thickness: 7,30 mm
Full mirror-polished 316L stainless steel case
Lugs/ Bezel/ Crown/ screw-down Back: polished 316L stainless steel
Domed mineral crystal - 1.8 mm thickness
Water resistance to:50m/5 ATM

Movement
Quartz Citizen caliber: Miyota GL20
Power reserve of 5 years
Functions: Hours Minutes

Dial
White-silvered semi-glossy

Hands
Rhodium-plated "sword" shaped Hour & Minutes hands

Strap
Interchangeable taupe stitched NATO nylon strap: water resistant & washable – length: 390mm / width: 12 mm
Special double turn NATO strap with moveable loop
Exclusive BRISTON logo on 1st loop
Polished 316L stainless steel pin buckle & Loops

BRISTON

Clubmaster LADY

Clubmaster LADY
19924.SPRG.M.1.NB
NEW PRODUCT APRIL 2019

Case
Size: 24 x 24 mm
Opening Dial: 18,5 mm
Thickness: 7,30 mm
Full mirror-polished 316L stainless steel case with rose gold PVD treatment
Lugs/ Bezel/ Crown/ screw-down Back: polished 316L stainless steel with rose gold PVD treatment
Crown in rose gold set with a black onyx cabochon
Domed mineral crystal - 1.8 mm thickness
Water resistance to:50m/5 ATM

Movement
Quartz Citizen caliber: Miyota GL20
Power reserve of 5 years
Functions: Hours Minutes

Dial
black semi-glossy

Hands
Rose gold plated "sword" shaped Hour & Minutes hands

Strap
Interchangeable black stitched NATO nylon strap: water resistant & washable – length: 390mm / width: 12 mm
Special double turn NATO strap with moveable loop
Exclusive BRISTON logo on 1st loop
Polished 316L stainless steel with rose gold PVD treatment pin buckle & Loops

BRISTON

Clubmaster LADY

Clubmaster LADY
19924.SPRG.M.2.NT
NEW PRODUCT APRIL 2019

Case
Size: 24 x 24 mm
Opening Dial: 18,5 mm
Thickness: 7,30 mm
Full mirror-polished 316L stainless steel case with rose gold PVD treatment
Lugs/ Bezel/ Crown/ screw-down Back: polished 316L stainless steel with rose gold PVD treatment
Crown in rose gold set with a black onyx cabochon
Domed mineral crystal - 1.8 mm thickness
Water resistance to:50m/5 ATM

Movement
Quartz Citizen caliber: Miyota GL20
Power reserve of 5 years
Functions: Hours Minutes

Dial
White-silvered semi-glossy

Hands
Rose gold plated "sword" shaped Hour & Minutes hands

Strap
Interchangeable taupe stitched NATO nylon strap: water resistant & washable – length: 390mm / width: 12 mm
Special double turn NATO strap with moveable loop
Exclusive BRISTON logo on 1st loop
Polished 316L stainless steel with rose gold PVD treatment pin buckle & Loops

BRISTON

CLUBMASTER LADY COLLECTION

245 $

230 $

215 $

200 $

185 $

24x24mm case
Full polished rose gold PVD
Double turn NATO strap
245 $

24x24mm case
Tortoise acetate & Rose gold PVD
Double turn NATO strap
215 $

24x24mm case
Full polished steel
Double turn NATO strap
200 $

24x24mm case
Tortoise shell acetate
Double turn NATO strap
185 $

Recommended public prices with taxes

NEW ACCESSORIES 2019

TOTAL OF 88 NEW REFERENCES

- Polished steel buckle
- Rose gold PVD buckle

NATO straps single turn for LADY
230mm – 12mm - 24 references

2-part leather straps (Alligator + calfskin leather)
110/70mm – 12mm - 18 references

Mesh bands for LADY
Single turn: 75/110mm – 2 references

NATO straps double turn for LADY
390mm – 12mm - 24 references

2-part leather straps (Alligator + calfskin leather)
280/70mm – 12mm - 18 references

Mesh bands for LADY
Double turns; 75/280mm – 2 references

April — Mid-April — End-April

BRISTON

NEW NATO STRAPS

New NATO straps of plain colors with moveable loop
Length of 230mm – Width: 12mm
Interchangeable NATO straps compatible only with Clubmaster LADY models
Public price: 35$
Available from April 2019

BLACK NS12.B | NAVY BLUE NS12.NV | PEACOCK BLUE NS12.BD | BRITISH GREEN NS12.BG | BURGUNDY NS12.BDX | FUSCHIA NS12.F | BROWN NS12.BRD | ORANGE NS12.O | MUSTARD NS12.MU | PINK NS12.PK | GREY TAUPE NS12.T | WHITE NS12.W

BLACK NS12.PVDRG.B | NAVY BLUE NS12.PVDRG.NV | PEACOCK BLUE NS12.PVDRG.BD | BRITISH GREEN NS12.PVDRG.BG | BURGUNDY NS12.PVDRG.BDX | FUSCHIA NS12.PVDRG.F | BROWN NS12.PVDRG.BRD | ORANGE NS12.PVDRG.O | MUSTARD NS12.PVDRG.MU | PINK NS12.PVDRG.PK | GREY TAUPE NS12.PVDRG.T | WHITE NS12.PVDRG.W

BRISTON

NEW NATO STRAPS

New Double turn NATO straps of plain colors with moveable loop
Llength of 390mm – Width: 12mm
Interchangeable NATO straps adaptable only for Clubmaster LADY models
Public price: 40$
Available from April 2019

BLACK ND12.B | NAVY BLUE ND12.NV | PEACOCK BLUE ND12.BD | BRITISH GREEN ND12.BG | BURGUNDY ND12.BDX | FUSCHIA ND12.F | BROWN ND12.BRD | ORANGE ND12.O | MUSTARD ND12.MU | PINK ND12.PK | GREY TAUPE ND12.T | WHITE ND12.W

BLACK ND12.PVDRG.B | NAVY BLUE ND12.PVDRG.NV | PEACOCK BLUE ND12.PVDRG.BD | BRITISH GREEN ND12.PVDRG.BG | BURGUNDY ND12.PVDRG.BD | FUSCHIA ND12.PVDRG.F | BROWN ND12.PVDRG.BRD | ORANGE ND12.PVDRG.O | MUSTARD ND12.PVDRG.MU | PINK ND12.PVDRG.PK | GREY TAUPE ND12.PVDRG.T | WHITE ND12.PVDRG.W

BRISTON

NEW 2-PART STRAPS

New 2-part leather strap in imitation Alligator
Interchangeable straps equipped with the single presto (pin) system to remove the strap
Polished steel pin buckle with BRISTON engraved
Straps adaptable only for Clubmaster LADY models - Length: 70/110mm – Width: 12mm
Public price: 80$ - Available from April 2019

IMITATION ALLIGATOR
STEEL BUCKLE

BLACK
LA12.B

NAVY BLUE
LA12.NV

GREEN
LA12.GR

BURGUNDY
LA12.BDX

FUSCHIA
LA12.F

PINK
LA12.PK

LIGHT BLUE
LA12.LB

WHITE
LA12.W

IMITATION ALLIGATOR
ROSE GOLD PVD
BUCKLE

BLACK
LA12.PVDRG.B

NAVY BLUE
LA12.PVDRG.NV

GREEN
LA12.PVDRG.GR

BURGUNDY
LA12.PVDRG.BDX

FUSCHIA
LA12.PVDRG.F

PINK
LA12.PVDRG.PK

LIGHT BLUE
LA12.PVDRG.LB

WHITE
LA12.PVDRG.W

BRISTON

NEW 2-PART STRAPS

New 2-part double turns in imitation Alligator leather straps
Interchangeable double turns straps equipped with the single presto (pin) system to remove the strap
Polished steel or rose gold PVD pin buckle with BRISTON engraved
Straps adaptable only for our Clubmaster LADY models - Length: 70/280mm – Width: 12mm
Public price: 90$ - Available from April 2019

IMITATION ALLIGATOR
STEEL BUCKLE

BLACK
LDA12.B

NAVY BLUE
LDA12.NV

GREEN
LDA12.GR

BURGUNDY
LDA12.BDX

FUSCHIA
LDA12.F

PINK
LDA12.PK

LIGHT BLUE
LDA12.LB

WHITE
LDA12.W

IMITATION ALLIGATOR
ROSE GOLD PVD BUCKLE

BLACK
LDA12.PVDRG.B

NAVY BLUE
LDA12.PVDRG.NV

GREEN
LD1A2.PVDRG.GR

BURGUNDY
LDA12.PVDRG.BDX

FUSCHIA
LDA12.PVDRG.F

PINK
LDA12.PVDRG.PK

LIGHT BLUE
LDA12.PVDRG.LB

WHITE
LDA12.PVDRG.W

BRISTON

CALFSKIN LEATHER STRAPS

New 2-part leather strap in **real calfskin leather strap**
Interchangeable straps equipped with the single presto (pin) system to remove the strap
Polished steel pin buckle with BRISTON engraved
Straps adaptable only for Clubmaster LADY models
Single turn = Length: 70/110mm – Width: 12mm - **Public price: 110$**
Double turns = Length: 70/280mm – Width: 12mm **Public price: 120$**
Available from April 2019

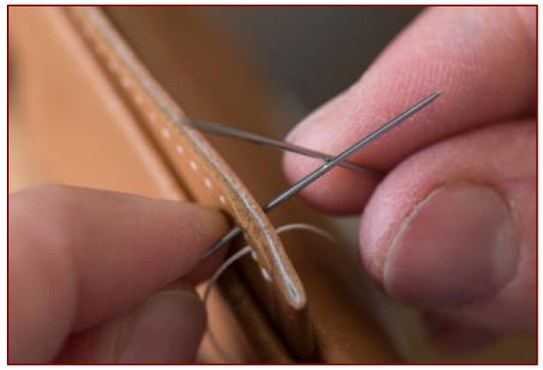

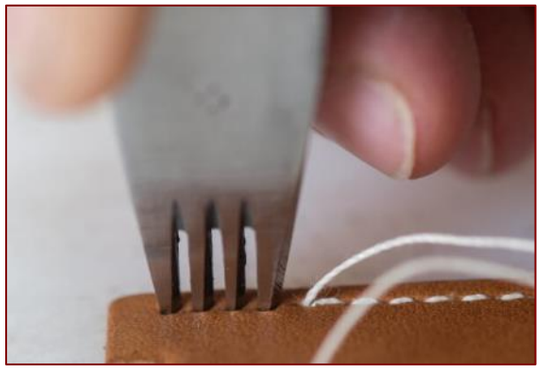

CALFSKIN LEATHER
STEEL BUCKLE

BROWN CALFSKIN LEATHER
LB12.BR
110$

BROWN CALFSKIN LEATHER
LDB12.BR
120$

CALFSKIN LEATHER
ROSE GOLD PVD BUCKLE

BROWN CALFSKIN LEATHER
LB12.PVDRG.BR
110$

BROWN CALFSKIN LEATHER
LDB12.PVDRG.BR
120$

BRISTON

MILANESE MESH BANDS

New Milanese mesh band equipped with the pins system to remove the strap
Polished mesh & brushed steel folding clasp with BRISTON engraved
2 length: Single turn = 75/110mm – Width: 12mm / Double turn = 75/280mm – Width: 12mm
Interchangeable & adaptable to only for Clubmaster LADY
Available from end of April 2019

MESH BANDS
12MM

MESH BAND SINGLE TURN
Brushed Steel
MB12.ST
80$

MESH BAND SINGLE TURN
Brushed Rose Gold
MB12.PVDRG.ST
100$

MESH BAND DOUBLE TURN
Brushed Steel
MBD12.ST
90$

MESH BAND DOUBLE TURN
Brushed Rose Gold
MBD12.PVDRG.ST
110$

Recommended Public prices in USD

CLUBMASTER
GMT TRAVELER

NEW PRODUCTS
JUNE 2019

BRISTON

LAUNCH PLAN JUNE 2019

CLUBMASTER GMT TRAVELER

Acetate & Steel

JUNE 2019

8 references – Special edition of 500 pieces

June

July

BRISTON

THE BIRTH OF WORLD-TIMERS & GMT

Pocket Watch, circa 1860
Silver case, dial with indication of 5 local times:
Montevideo at the center, San Francisco,
Rio de Janeiro, New York and Paris.

- Before the world was divided into time zones, **there were hundreds of local times based on the longitude of regions and more or less recognized officially**.
- Watchmakers began making what were known as "**captain's" watches**; these indicated the local time of a traveler's point of departure on one dial and that of the place where the traveler was on a second. Other watches mentioned the local time of a whole number of towns as well as that of the place where one was staying.

This situation caused all sorts of confusion at a time when trade and transportation were expanding rapidly. Then, **in 1870**, the Canadian engineer, **Sandford Fleming proposed dividing the globe into 24 zones**, with each one covering 15° of longitude (corresponding to one hour).

This concept was gradually adopted by the whole international community in 1911.

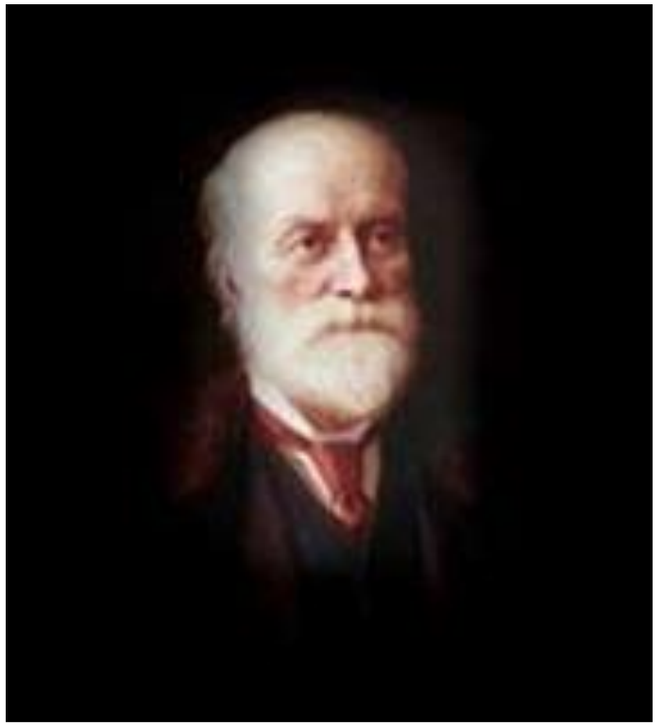

Sandford Fleming.

BRISTON

THE BIRTH OF WORLD-TIMERS & GMT

More particularly, "GMT" stands for Greenwich Mean Time and is the "0" point on the 24 hour scale of international time zones. Greenwich is in England, and from there other time zones are plus (+) or minus (-) GMT.

GMT was established so that travelers would be able to quickly to know what time it is all over the world as long as they knew what the GMT time was and what to add or subtract from that time to get the local time on another place.

The system has been adjusted several times, including a brief period where time coordination radio signals broadcast both UTC and "Stepped Atomic Time (SAT)" before a new UTC was adopted in 1970 and implemented in 1972.

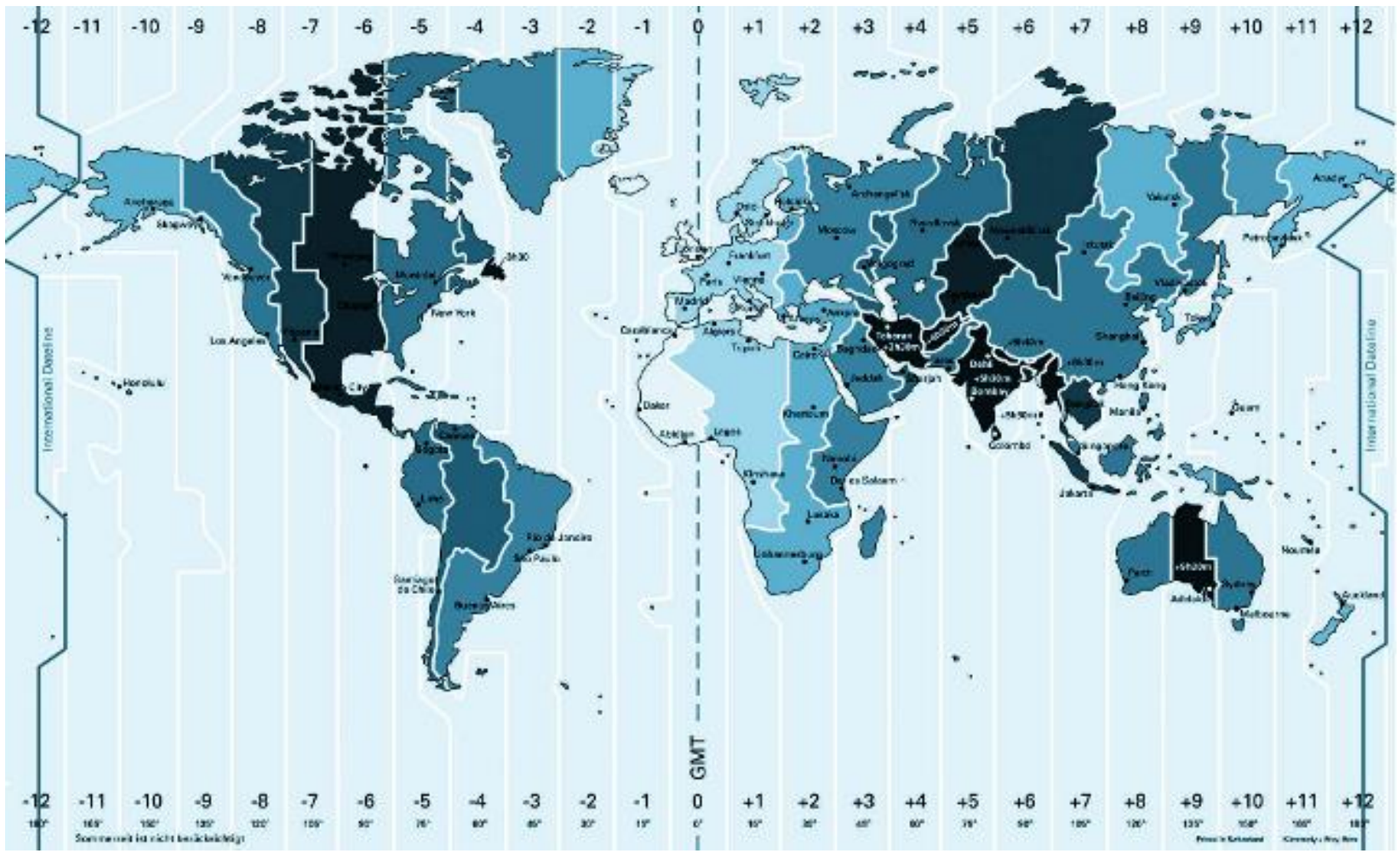

BRISTON

THE BIRTH OF WORLD-TIMERS & GMT

To show the time in several different time zones, watchmakers tried incorporating two **synchronized movements** into a watch.

Then, in **1935**, an independent Geneva watchmaker, **Louis Cottier**, invented the **ingenious system** of a watch with two crowns, with a **universal time display** showing the time in several cities simultaneously.

Nowadays, **GMT watches** are used to show two time zones at once, with traditionalists setting the GMT hand to the actual GMT time.

Louis Cottier,Geneva 1935

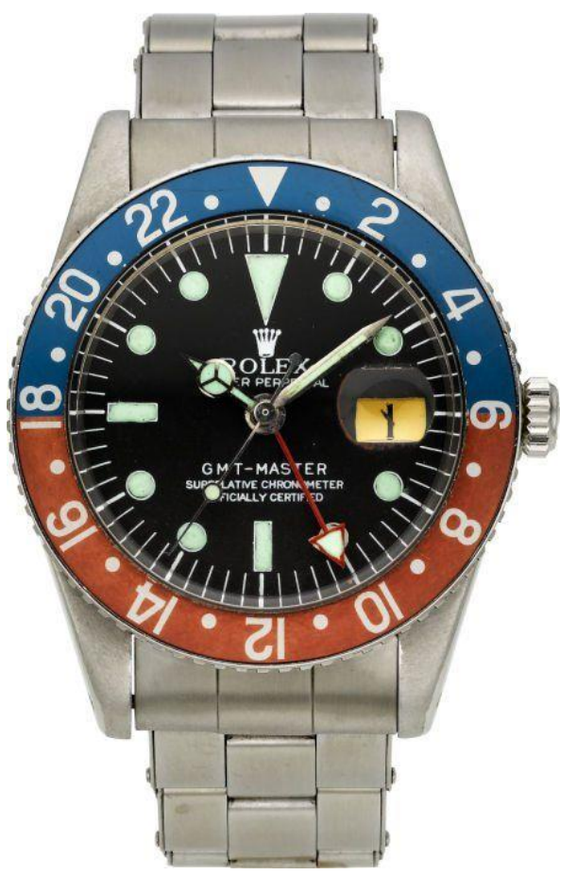

▪ **Rolex** was the first watchmaking brand to introduce a GMT watch in 1955, working with Pan American Airways to provide a watch capable of keeping track of local and **GMT time**, a necessity for pilots crossing many time zones on long-haul flights.

BRISTON

THE NEW CLUBMASTER GMT TRAVELER

- Introduce a new watchmaking **GMT function** in a **exclusive & special edition of 500 pieces**

- One of the most popular types of watches for enthusiasts, respond to the growing demand on GMT watches & serve as ideal travel companions.

- Enhance the **BRISTON** offer with a watch using for the first time a **Swiss movement** highlighting the watchmaking side of the Brand.

- In the same design spirit of the **Clubmaster DIVER**, propose an **authentic 42mm case design** recognizable by these 2 crowns on the right hand:
  -1 Crown located at 2 o'clock to rotate the inner ring
  -1 screw-down crown at 4 o'clock to set the time, date and GMT function

- Strengthen the brand's position into the premium watch segment – price ticket at 1500$

- **Generate new communication opportunities with a talking piece** combining an iconic design, a Swiss movement & a useful function.

Launch date: June 2019
8 references – Special edition of 500 pieces

BRISTON

THE CASE & DESIGN

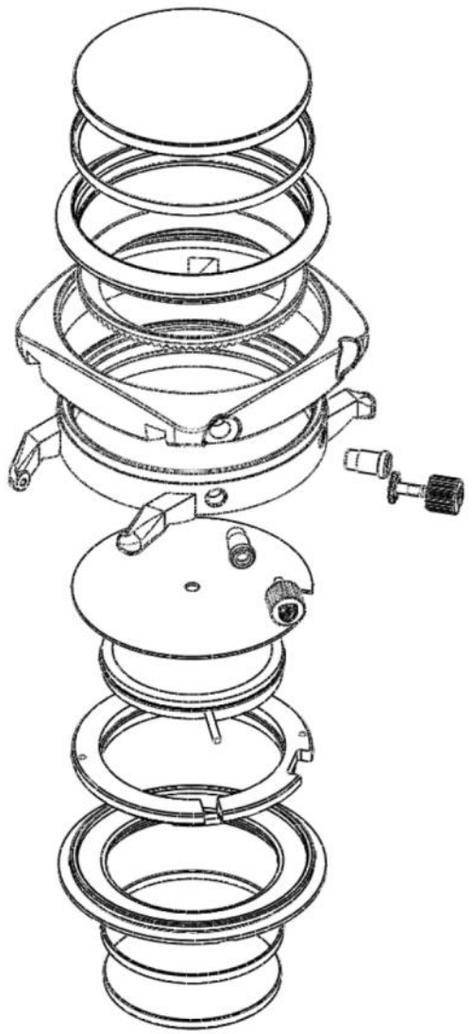

Aligned with the **Clubmaster DIVER** case (2 crowns on the case side), the **Clubmaster GMT Traveler** uses an elegant yet robust 42x42mm case with the following characteristics:

- Case dimension: 42x42mm
- Height: 11,45mm
- Water resistance to 100 meters – 10 ATM
- See-through case-back to see the movement
- Bidirectional rotating inner ring (crown at 2 o'clock)
- Screwed-down crown to set time / date & rewind the movement (crown at 4 o'clock) & set the GMT hand
- Ultra resistant sapphire glass – 2,1mm of thickness
- Screwed down case-back

With a **natural elegance & a style resolutely vintage**, this new cambered-square shaped has been crafted in **tortoise shell acetate or mirror-polished stainless steel.**

BRISTON

THE SWISS GMT AUTOMATIC MOVEMENT

Our new Clubmaster GMT Traveler models are equipped for the first time with the Swiss movement SW330-1 manufactured by Sellita.

Movement Sellita SW330-1, mechanical with automatic winding
Self-winding - 4 hands - 2nd time zone - date
Caliber: 11 ½ '''
Hauteur : 4.10 mm
Frequency: 28,800 vibrations/hour (4 Hz.)
Power reserve: up to 42 hours
Jewels: 25
Bidirectional rotor with ball bearing
Functions: Hours, minutes and central sweep seconds
2nd time zone by central hand
Date at 3 o'clock with quick setting & Stop second device

USE OF THE CLUBMASTER GMT TRAVELER

Our Clubmaster GMT Traveler models are equipped with the Swiss movement SW330-1 manufactured by Sellita.
Functions : hour, minute, central second, date at 3 o'clock & GMT function.

Bidirectional inner ring with 24h indication AM – PM indication

Hours hand

Central seconds hand

Crown A at 2h to turn the inner ring

Minutes hand

Date

3-position screw-down crown B to rewind the movement, set the time, the date & GMT function

Position 1 to rewind the movement

Position 2 to set the date & the GMT function

Position 3 to set the time

A. First use & setting of the time

1. Unscrew clockwise the crown B to reach the position 1.
2. A few turns of crown anticlockwise are sufficient to start the watch and to manually run the movement.
3. Pull the crown B in position 3. The movement is stopped (« stop second » function). Move the hands clockwise until the desired time.
4. Push again the crown B into position 1 & screw again the crown against the case by turning it anticlockwise. The watch is turning on again.

B. Setting the DATE & the GMT function

1. Unscrew clockwise the crown B situated at 4 o'clock to reach the position 1.
2. Pull out the winder B into position 2. Turn the winder (crown) clockwise to set the date. If the date is set between 10 PM and 2AM, it is possible that it will not change the next day.
3. Stay into position 2 & turn the crown B anticlockwise to set the GMT hand at the desired second time zone.
4. Push & screw back the crown against the case by turning it anticlockwise. The watch is turning on again.

BRISTON

USE OF THE INNER RING & THE GMT FUNCTION

Position 1

Set your local time (Hours & minutes hands)
For example: Paris GMT +1 (10:09 AM)

Position 2

Position the inner ring (Crown A) in front of the hour hand to indicate you your local time
Choose your second time zone (Crown B) by positioning the GMT hand.
For example: GMT – 5 = New York (4:09 AM)

Position 3

Local time Paris = 1:51 pm
New York 2nd time zone = 7:51 am
Time difference of 6 hours between Paris & New York

<u>Reading of the second time – Using the GMT function</u>

1. Turn the crown A situated at 2 o'clock to activate & turn the bidirectional inner ring.
2. Position the inner ring so that it corresponds to your time – if your local time is 10h09, please position the figure 10 of the inner ring in front of the hour hand.
3. Unscrew the crown B & put it into position 2. Turn this crown B anticlockwise to set the GMT hand at the desired second time zone.
4. Then, pull back the crown B & screw it back against the case. Now, you can read on the inner ring the second time zone. So if it's 13h51 in Paris, it's 7h51 in the morning in New York.

BRISTON

Clubmaster GMT TRAVELER

Automatic HMS Date with GMT
19842.SA.T.1.NB
Special Edition of 500 pieces
NEW PRODUCT JUNE 2019

CASE
Size: 42 x 42 mm
Dial opening: 33,5 mm
Thickness: 11,45 mm
Italian tortoise shell Acetate: handmade polished finish
Lugs / Bezel / Crowns / screw-down case-back: polished 316L stainless steel
Polished stainless steel crown (2 o'clock) to rotate the bi-directional inner ring engraved with BRISTON blazon
Polished stainless steel screw-down crown (4 o'clock) engraved with BRISTON blazon
Ultra-resistant sapphire glass – 2,10mm thickness
See-through case-back with K1 glass

MOVEMENT
Automatic Swiss movement SW330-1 manufactured by Sellita
Mechanical with automatic winding with ball bearing (Bi-directional)
Caliber: 11½'''
Frequency: 28'800 vibrations/hour (4Hz.)
Jewels: 25
Power reserve: up to 42 hours
Quick date correction
Functions: Hours, minutes, central seconds, date calendar, GMT function with day/night indication

DIAL
Upper plate: Black semi glossy with white lines (minutes indication)
Under plate: white-silvered
Polished stainless steel indexes
Indexes in polished stainless steel
Black & white bi-directional inner rotating ring with AM – PM indication / glossy finish
Date window positioned at 3 o'clock

HANDS
Rhodium-plated "baton" Hour & Minutes hands & with C1 white Superluminova® inserts
White-coated central seconds hand with squared tip
Red GMT central hand with C1 white Superluminova® inserts

STRAP
Interchangeable black genuine stitched NATO nylon strap: water resistant & washable
Length: 280mm / width: 20 mm
Exclusive BRISTON logo on 1st loop
Polished 316L stainless steel pin buckle & Loops

BRISTON

Clubmaster GMT TRAVELER

Automatic HMS Date with GMT
19842.SA.T.9.NNB
Special Edition of 500 pieces
NEW PRODUCT JUNE 2019

CASE
Size: 42 x 42 mm
Dial opening: 33,5 mm
Thickness: 11,45 mm
Italian tortoise shell Acetate: handmade polished finish
Lugs / Bezel / Crowns / screw-down case-back: polished 316L stainless steel
Polished stainless steel crown (2 o'clock) to rotate the bi-directional inner ring engraved with BRISTON blazon
Polished stainless steel screw-down crown (4 o'clock) engraved with BRISTON blazon
Ultra-resistant sapphire glass – 2,10mm thickness
See-through case-back with K1 glass

MOVEMENT
Automatic Swiss movement SW330-1 manufactured by Sellita
Mechanical with automatic winding with ball bearing (Bi-directional)
Caliber: 11½'''
Frequency: 28'800 vibrations/hour (4Hz.)
Jewels: 25
Power reserve: up to 42 hours
Quick date correction
Functions: Hours, minutes, central seconds, date calendar, GMT function with day/night indication

DIAL
Upper plate: Black semi glossy with white lines (minutes indication)
Under plate: white-silvered
Polished stainless steel indexes
Indexes in polished stainless steel
Black & navy blue bi-directional inner rotating ring with AM – PM indication / glossy finish
Date window positioned at 3 o'clock

HANDS
Rhodium-plated "baton" Hour & Minutes hands & with C1 white Superluminova® inserts
White-coated central seconds hand with squared tip
Red GMT central hand with C1 white Superluminova® inserts

STRAP
Interchangeable Navy blue genuine stitched NATO nylon strap: water resistant & washable
Length: 280mm / width: 20 mm
Exclusive BRISTON logo on 1st loop
Polished 316L stainless steel pin buckle & Loops

BRISTON

Clubmaster GMT TRAVELER

Automatic HMS Date with GMT
19842.SA.T.10.NBG
Special Edition of 500 pieces
NEW PRODUCT JUNE 2019

CASE
Size: 42 x 42 mm
Dial opening: 33,5 mm
Thickness: 11,45 mm
Italian tortoise shell Acetate: handmade polished finish
Lugs / Bezel / Crowns / screw-down case-back: polished 316L stainless steel
Polished stainless steel crown (2 o'clock) to rotate the bi-directional inner ring engraved with BRISTON blazon
Polished stainless steel screw-down crown (4 o'clock) engraved with BRISTON blazon
Ultra-resistant sapphire glass – 2,10mm thickness
See-through case-back with K1 glass

MOVEMENT
Automatic Swiss movement SW330-1 manufactured by Sellita
Mechanical with automatic winding with ball bearing (Bi-directional)
Caliber: 11½'''
Frequency: 28'800 vibrations/hour (4Hz.)
Jewels: 25
Power reserve: up to 42 hours
Quick date correction
Functions: Hours, minutes, central seconds, date calendar, GMT function with day/night indication

DIAL
Upper plate: Black semi glossy with white lines (minutes indication)
Under plate: white-silvered
Polished stainless steel indexes
Indexes in polished stainless steel
Black & British Green bi-directional inner rotating ring with AM – PM indication / glossy finish
Date window positioned at 3 o'clock

HANDS
Rhodium-plated "baton" Hour & Minutes hands & with C1 white Superluminova® inserts
White-coated central seconds hand with squared tip
Red GMT central hand with C1 white Superluminova® inserts

STRAP
Interchangeable British Green genuine stitched NATO nylon strap: water resistant & washable
Length: 280mm / width: 20 mm
Exclusive BRISTON logo on 1st loop
Polished 316L stainless steel pin buckle & Loops

BRISTON

Clubmaster GMT TRAVELER

Automatic HMS Date with GMT
19842.SA.T.P.NR
Special Edition of 500 pieces
NEW PRODUCT JUNE 2019

CASE
Size: 42 x 42 mm
Dial opening: 33,5 mm
Thickness: 11,45 mm
Italian tortoise shell Acetate: handmade polished finish
Lugs / Bezel / Crowns / screw-down case-back: polished 316L stainless steel
Polished stainless steel crown (2 o'clock) to rotate the bi-directional inner ring engraved with BRISTON blazon
Polished stainless steel screw-down crown (4 o'clock) engraved with BRISTON blazon
Ultra-resistant sapphire glass – 2,10mm thickness
See-through case-back with K1 glass

MOVEMENT
Automatic Swiss movement SW330-1 manufactured by Sellita
Mechanical with automatic winding with ball bearing (Bi-directional)
Caliber: 11½'''
Frequency: 28'800 vibrations/hour (4Hz.)
Jewels: 25
Power reserve: up to 42 hours
Quick date correction
Functions: Hours, minutes, central seconds, date calendar, GMT function with day/night indication

DIAL
Upper plate: Black semi glossy with white lines (minutes indication)
Under plate: white-silvered
Polished stainless steel indexes
Indexes in polished stainless steel
Blue & Red bi-directional inner rotating ring with AM – PM indication / glossy finish
Date window positioned at 3 o'clock

HANDS
Rhodium-plated "baton" Hour & Minutes hands & with C1 white Superluminova® inserts
White-coated central seconds hand with squared tip
Red GMT central hand with C1 white Superluminova® inserts

STRAP
Interchangeable Red genuine stitched NATO nylon strap: water resistant & washable
Length: 280mm / width: 20 mm
Exclusive BRISTON logo on 1st loop
Polished 316L stainless steel pin buckle & Loops

BRISTON

Clubmaster GMT TRAVELER

Automatic HMS Date with GMT
19842.PS.G.1.NB
Special Edition of 500 pieces
NEW PRODUCT JUNE 2019

CASE
Size: 42 x 42 mm
Dial opening: 33,5 mm
Thickness: 11,45 mm
Full mirror-polished 316L Stainless steel case
Polished stainless steel crown (2 o'clock) to rotate the bi-directional inner ring engraved with BRISTON blazon
Polished stainless steel screw-down crown (4 o'clock) engraved with BRISTON blazon
Ultra-resistant sapphire glass – 2,10mm thickness
See-through case-back with K1 glass

MOVEMENT
Automatic Swiss movement SW330-1 manufactured by Sellita
Mechanical with automatic winding with ball bearing (Bi-directional)
Caliber: 11½'''
Frequency: 28'800 vibrations/hour (4Hz.)
Jewels: 25
Power reserve: up to 42 hours
Quick date correction
Functions: Hours, minutes, central seconds, date calendar, GMT function with day/night indication

DIAL
Upper plate: Black semi glossy with white lines (minutes indication)
Under plate: white-silvered
Polished stainless steel indexes
Indexes in polished stainless steel
Black & white bi-directional inner rotating ring with AM – PM indication / glossy finish
Date window positioned at 3 o'clock

HANDS
Rhodium-plated "baton" Hour & Minutes hands & with C1 white Superluminova® inserts
White-coated central seconds hand with squared tip
Red GMT central hand with C1 white Superluminova® inserts

STRAP
Interchangeable black genuine stitched NATO nylon strap: water resistant & washable
Length: 280mm / width: 20 mm
Exclusive BRISTON logo on 1st loop
Polished 316L stainless steel pin buckle & Loops

BRISTON

Clubmaster GMT TRAVELER

Automatic HMS Date with GMT
19842.PS.G.9.NNB
Special Edition of 500 pieces
NEW PRODUCT JUNE 2019

CASE
Size: 42 x 42 mm
Dial opening: 33,5 mm
Thickness: 11,45 mm
Full mirror-polished 316L Stainless Steel case
Polished stainless steel crown (2 o'clock) to rotate the bi-directional inner ring engraved with BRISTON blazon
Polished stainless steel screw-down crown (4 o'clock) engraved with BRISTON blazon
Ultra-resistant sapphire glass – 2,10mm thickness
See-through case-back with K1 glass

MOVEMENT
Automatic Swiss movement SW330-1 manufactured by Sellita
Mechanical with automatic winding with ball bearing (Bi-directional)
Caliber: 11½'''
Frequency: 28'800 vibrations/hour (4Hz.)
Jewels: 25
Power reserve: up to 42 hours
Quick date correction
Functions: Hours, minutes, central seconds, date calendar, GMT function with day/night indication

DIAL
Upper plate: Black semi glossy with white lines (minutes indication)
Under plate: white-silvered
Polished stainless steel indexes
Indexes in polished stainless steel
Black & navy blue bi-directional inner rotating ring with AM – PM indication / glossy finish
Date window positioned at 3 o'clock

HANDS
Rhodium-plated "baton" Hour & Minutes hands & with C1 white Superluminova® inserts
White-coated central seconds hand with squared tip
Red GMT central hand with C1 white Superluminova® inserts

STRAP
Interchangeable Navy blue genuine stitched NATO nylon strap: water resistant & washable
Length: 280mm / width: 20 mm
Exclusive BRISTON logo on 1st loop
Polished 316L stainless steel pin buckle & Loops

BRISTON

Clubmaster GMT TRAVELER

Automatic HMS Date with GMT
19842.PS.G.10.NBG
Special Edition of 500 pieces
NEW PRODUCT JUNE 2019

CASE
Size: 42 x 42 mm
Dial opening: 33,5 mm
Thickness: 11,45 mm
Full mirror-polished 316L Stainless Steel case
Polished stainless steel crown (2 o'clock) to rotate the bi-directional inner ring engraved with BRISTON blazon
Polished stainless steel screw-down crown (4 o'clock) engraved with BRISTON blazon
Ultra-resistant sapphire glass – 2,10mm thickness
See-through case-back with K1 glass

MOVEMENT
Automatic Swiss movement SW330-1 manufactured by Sellita
Mechanical with automatic winding with ball bearing (Bi-directional)
Caliber: 11½'''
Frequency: 28'800 vibrations/hour (4Hz.)
Jewels: 25
Power reserve: up to 42 hours
Quick date correction
Functions: Hours, minutes, central seconds, date calendar, GMT function with day/night indication

DIAL
Upper plate: Black semi glossy with white lines (minutes indication)
Under plate: white-silvered
Polished stainless steel indexes
Indexes in polished stainless steel
Black & British Green bi-directional inner rotating ring with AM – PM indication / glossy finish
Date window positioned at 3 o'clock

HANDS
Rhodium-plated "baton" Hour & Minutes hands & with C1 white Superluminova® inserts
White-coated central seconds hand with squared tip
Red GMT central hand with C1 white Superluminova® inserts

STRAP
Interchangeable British Green genuine stitched NATO nylon strap: water resistant & washable
Length: 280mm / width: 20 mm
Exclusive BRISTON logo on 1st loop
Polished 316L stainless steel pin buckle & Loops

BRISTON

Clubmaster GMT TRAVELER

Automatic HMS Date with GMT
19842.PS.G.P.NR
Special Edition of 500 pieces
NEW PRODUCT JUNE 2019

CASE
Size: 42 x 42 mm
Dial opening: 33,5 mm
Thickness: 11,45 mm
Full mirror-polished 316L Stainless Steel case
Polished stainless steel crown (2 o'clock) to rotate the bi-directional inner ring engraved with BRISTON blazon
Polished stainless steel screw-down crown (4 o'clock) engraved with BRISTON blazon
Ultra-resistant sapphire glass – 2,10mm thickness
See-through case-back with K1 glass

MOVEMENT
Automatic Swiss movement SW330-1 manufactured by Sellita
Mechanical with automatic winding with ball bearing (Bi-directional)
Caliber: 11½'''
Frequency: 28'800 vibrations/hour (4Hz.)
Jewels: 25
Power reserve: up to 42 hours
Quick date correction
Functions: Hours, minutes, central seconds, date calendar, GMT function with day/night indication

DIAL
Upper plate: Black semi glossy with white lines (minutes indication)
Under plate: white-silvered
Polished stainless steel indexes
Indexes in polished stainless steel
Blue & Red bi-directional inner rotating ring with AM – PM indication / glossy finish
Date window positioned at 3 o'clock

HANDS
Rhodium-plated "baton" Hour & Minutes hands & with C1 white Superluminova® inserts
White-coated central seconds hand with squared tip
Red GMT central hand with C1 white Superluminova® inserts

STRAP
Interchangeable Red genuine stitched NATO nylon strap: water resistant & washable
Length: 280mm / width: 20 mm
Exclusive BRISTON logo on 1st loop
Polished 316L stainless steel pin buckle & Loops

BRISTON

COLLECTION CLUBMASTER GMT TRAVELER

1600$

1500$

Clubmaster GMT Traveler

42mm case in tortoise shell acetate
Swiss Sellita SW330-1
NATO strap
1500$

Clubmaster GMT Traveler

42mm case in full steel
Swiss Sellita SW330-1
NATO strap
1500$

CLUBMASTER GMT TRAVELER

1400$

BRISTON

Recommended retail Public Price

COMPETITION

GMT FUNCTION

4000$

3500$

3000$

2500$

2000$

1500$

1000$

EBERHARD
SCAFOGRAF GMT
ETA 2893-2
43mm – sapphire glass
3880$

BELL&ROSS
BR V2-93 GMT
Caliber BR-CAL.303
41mm – sapphire glass
3200$

SEIKO
GRAND SEIKO GMT
9F86 Quartz
39mm – sapphire glass
3200$

ORIS
Oris Greenwich Mean Time Limited Edition
Oris 690, base ETA 2836-2
42mm
3325$

ORIS
DIVER GMT
Oris 668, base ETA 2893-2
44mm
2625$

FREDERIQUE CONSTANT
RUNABOUT GMT
FC-350 based on a Sellita
42mm – sapphire glass
1795$

HAMILTON
Jazzmaster Traveler GMT
Movement ETA 2892-A2
42mm – sapphire glass
975$

LONGINES
Conquest V.H.P. GMT
Quartz L287
43mm case – sapphire glass
1050$

RAYMOND WEIL
TANGO 300 GMT
Quartz with GMT function
42mm – sapphire glass
1095$

MIDO
MULTIFORT GMT
Movement ETA 2893-2
42mm – sapphire glass
1250$

LONGINES
Conquest V.H.P. GMT
Caliver 704,2 Auto
4mm case – sapphire glass
1300$

Clubmaster GMT Traveler
Swiss Automatic SW330-1
42mm case – Sapphire glass
1500$

ALPINA
STARTIMER GMT
AL-555Automatic
42mm – sapphire glass
1500$

Public prices with taxes

CLUBMASTER ICONIC

NEW PRODUCTS
SEPTEMBER 2019

BRISTON

LAUNCH PLAN – THIRD PERIOD 2019

CLUBMASTER ICONIC
Acétate & Steel

ICONIC DATE

ICONIC OPEN

September 2019
8 references

September — October

BRISTON

CLUBMASTER ICONIC

After the launch of the **Clubmaster ICONIC** in last September 2018, animate this collection with :

→ **new dials of colors** (dark red, navy blue / British green / grey) adorned with a pure **watchmaking sunray finishing** in line with the spirit of this collection

→ propose all these **new models assembled on NATO straps** so generate business opportunities with one of the cheapest Automatic watch in the market – entry price at 455$

ICONIC GOLD: To be consistent with the rest of the **Clubmaster ICONIC** collection, we also introduce new ICONIC Gold models with white-silvered & black dials (4 references) dressed on **2-part vintage leather straps.**

Launch date: September 2019
Total of 12 references

BRISTON

THE DIALS OF COLORS

The **colored dials** (Dark red, Navy blue, British Green & Grey) of this collection are adorned **with satin-finished sunray* treatment** which gives a incomparably appealing. In contrast with the polished finish of the case (either in tortoise acetate or full stainless steel), the matt finish of the dial is increasing the readability of the watch.

The **distinctive & pure watchmaking finishing** on the dial enhance the strong character of the watch without altering its sobriety.

A pattern of imperceptible lines, like the sun's rays, intersecting at the same central point. It is created using a brush, usually with metal filaments.

Clubmaster ICONIC

Automatic HMS OPEN
18740.SA.TI.8.NBDX
NEW PRODUCT SEPTEMBER 2019

CASE
Size: 40 x 40 mm
Dial opening: 32,15 mm
Thickness: 11,70 mm
Italian tortoise shell Acetate: handmade polished finish
Lugs / Bezel / Crown / case-back: polished 316L stainless steel
Polished stainless steel crown in trapezium shape engraved with BRISTON blazon
Ultra-resistant sapphire glass - 2mm thickness
See-through case-back with K1 glass
Water resistance to: 50m/5ATM

MOVEMENT
Automatic movement NH38A manufactured by Seiko
Mechanical with automatic winding with ball bearing (Bi-directional)
Rotor with "Côte de Genève" decoration
Caliber: 12'''
Frequency: 21'600 vibrations/hour (3Hz.)
Jewels: 24
Power reserve: up to 41 hours
Functions: Hours, minutes, central seconds, opening on balance wheel at 9 o'clock

DIAL
Dark red dial with a "sunray" finishing
Polished stainless steel applied indexes in arrow shape
Double applied indexes at 12 o'clock & white small lines (minutes indication)
Opening with diamond-cut bevel at 9 o'clock

HANDS
Polished rhodium-plated Dauphine style Hour & Minutes hands
Polished rhodium-plated central seconds hand

STRAP
Interchangeable Burgundy stitched NATO nylon strap - length: 245mm / width: 20 mm - special NATO strap with moveable loop
Polished 316L stainless steel pin buckle & Loop

BRISTON

Clubmaster ICONIC

Automatic HMS OPEN
18740.SA.TI.9.NNB
NEW PRODUCT SEPTEMBER 2019

CASE
Size: 40 x 40 mm
Dial opening: 32,15 mm
Thickness: 11,70 mm
Italian tortoise shell Acetate: handmade polished finish
Lugs / Bezel / Crown / case-back: polished 316L stainless steel
Polished stainless steel crown in trapezium shape engraved with BRISTON blazon
Ultra-resistant sapphire glass - 2mm thickness
See-through case-back with K1 glass
Water resistance to: 50m/5ATM

MOVEMENT
Automatic movement NH38A manufactured by Seiko
Mechanical with automatic winding with ball bearing (Bi-directional)
Rotor with "Côte de Genève" decoration
Caliber: 12'''
Frequency: 21'600 vibrations/hour (3Hz.)
Jewels: 24
Power reserve: up to 41 hours
Functions: Hours, minutes, central seconds, opening on balance wheel at 9 o'clock

DIAL
Blue dial with a "sunray" finishing
Polished stainless steel applied indexes in arrow shape
Double applied indexes at 12 o'clock & white small lines (minutes indication)
Opening with diamond-cut bevel at 9 o'clock

HANDS
Polished rhodium-plated Dauphine style Hour & Minutes hands
Polished rhodium-plated central seconds hand

STRAP
Interchangeable Navy blue stitched NATO nylon strap - length: 245mm / width: 20 mm - special NATO strap with moveable loop
Polished 316L stainless steel pin buckle & Loop

BRISTON

Clubmaster ICONIC

Automatic HMS OPEN
18740.SA.TI.10.NBG
NEW PRODUCT SEPTEMBER 2019

CASE
Size: 40 x 40 mm
Dial opening: 32,15 mm
Thickness: 11,70 mm
Italian tortoise shell Acetate: handmade polished finish
Lugs / Bezel / Crown / case-back: polished 316L stainless steel
Polished stainless steel crown in trapezium shape engraved with BRISTON blazon
Ultra-resistant sapphire glass - 2mm thickness
See-through case-back with K1 glass
Water resistance to: 50m/5ATM

MOVEMENT
Automatic movement NH38A manufactured by Seiko
Mechanical with automatic winding with ball bearing (Bi-directional)
Rotor with "Côte de Genève" decoration
Caliber: 12'''
Frequency: 21'600 vibrations/hour (3Hz.)
Jewels: 24
Power reserve: up to 41 hours
Functions: Hours, minutes, central seconds, opening on balance wheel at 9 o'clock

DIAL
British green dial with a "sunray" finishing
Polished stainless steel applied indexes in arrow shape
Double applied indexes at 12 o'clock & white small lines (minutes indication)
Opening with diamond-cut bevel at 9 o'clock

HANDS
Polished rhodium-plated Dauphine style Hour & Minutes hands
Polished rhodium-plated central seconds hand

STRAP
Interchangeable British Green stitched NATO nylon strap - length: 245mm / width: 20 mm - special NATO strap with moveable loop
Polished 316L stainless steel pin buckle & Loop

BRISTON

Clubmaster ICONIC

Automatic HMS OPEN
18740.SA.TI.11.NG
NEW PRODUCT SEPTEMBER 2019

CASE
Size: 40 x 40 mm
Dial opening: 32,15 mm
Thickness: 11,70 mm
Italian tortoise shell Acetate: handmade polished finish
Lugs / Bezel / Crown / case-back: polished 316L stainless steel
Polished stainless steel crown in trapezium shape engraved with BRISTON blazon
Ultra-resistant sapphire glass - 2mm thickness
See-through case-back with K1 glass
Water resistance to: 50m/5ATM

MOVEMENT
Automatic movement NH38A manufactured by Seiko
Mechanical with automatic winding with ball bearing (Bi-directional)
Rotor with "Côte de Genève" decoration
Caliber: 12'''
Frequency: 21'600 vibrations/hour (3Hz.)
Jewels: 24
Power reserve: up to 41 hours
Functions: Hours, minutes, central seconds, opening on balance wheel at 9 o'clock

DIAL
Grey dial with a "sunray" finishing
Polished stainless steel applied indexes in arrow shape
Double applied indexes at 12 o'clock & white small lines (minutes indication)
Opening with diamond-cut bevel at 9 o'clock

HANDS
Polished rhodium-plated Dauphine style Hour & Minutes hands
Polished rhodium-plated central seconds hand

STRAP
Interchangeable Grey stitched NATO nylon strap - length: 245mm / width: 20 mm - special NATO strap with moveable loop
Polished 316L stainless steel pin buckle & Loop

BRISTON

Clubmaster ICONIC

Automatic HMS Date
19640.PS.I.8.NBDX
NEW PRODUCT SEPTEMBER 2019

CASE
Size: 40 x 40 mm
Dial opening: 32,15 mm
Thickness: 11,70 mm
Full mirror-polished 316L Stainless Steel case
Polished stainless steel crown in trapezium shape engraved with BRISTON blazon
Ultra-resistant sapphire glass - 2mm thickness
See-through case-back with K1 glass
Water resistance to: 50m/5ATM

MOVEMENT
Automatic movement NH35A manufactured by Seiko
Mechanical with automatic winding with ball bearing (Bi-directional)
Rotor with "Côte de Genève" decoration
Caliber: 12'''
Frequency: 21'600 vibrations/hour (3Hz.)
Jewels: 24
Power reserve: up to 41 hours
Quick date correction
Functions: Hours, minutes, central seconds, date calendar

DIAL
Dark Red with "sunray" finish
Polished stainless steel applied indexes in arrow shape
Double applied indexes at 12 o'clock & white small lines (minutes indication)

HANDS
Polished rhodium-plated Dauphine style Hour & Minutes hands
Polished rhodium-plated central seconds hand
Date window positioned at 6 o'clock

STRAP
Interchangeable Burgundy stitched NATO nylon strap - length: 245mm / width: 20 mm - special NATO strap with moveable loop
Polished 316L stainless steel pin buckle & Loop

BRISTON

Clubmaster ICONIC

Automatic HMS Date
19640.PS.I.9.NNV
NEW PRODUCT SEPTEMBER 2019

CASE
Size: 40 x 40 mm
Dial opening: 32,15 mm
Thickness: 11,70 mm
Full mirror-polished 316L Stainless Steel case
Polished stainless steel crown in trapezium shape engraved with BRISTON blazon
Ultra-resistant sapphire glass - 2mm thickness
See-through case-back with K1 glass
Water resistance to: 50m/5ATM

MOVEMENT
Automatic movement NH35A manufactured by Seiko
Mechanical with automatic winding with ball bearing (Bi-directional)
Rotor with "Côte de Genève" decoration
Caliber: 12'''
Frequency: 21'600 vibrations/hour (3Hz.)
Jewels: 24
Power reserve: up to 41 hours
Quick date correction
Functions: Hours, minutes, central seconds, date calendar

DIAL
Blue dial with "sunray" finish
Polished stainless steel applied indexes in arrow shape
Double applied indexes at 12 o'clock & white small lines (minutes indication)

HANDS
Polished rhodium-plated Dauphine style Hour & Minutes hands
Polished rhodium-plated central seconds hand
Date window positioned at 6 o'clock

STRAP
Interchangeable Navy Blue stitched NATO nylon strap - length: 245mm / width: 20 mm - special NATO strap with moveable loop
Polished 316L stainless steel pin buckle & Loop

BRISTON

Clubmaster ICONIC

Automatic HMS Date
19640.PS.I.10.NBG
NEW PRODUCT SEPTEMBER 2019

CASE
Size: 40 x 40 mm
Dial opening: 32,15 mm
Thickness: 11,70 mm
Full mirror-polished 316L Stainless Steel case
Polished stainless steel crown in trapezium shape engraved with BRISTON blazon
Ultra-resistant sapphire glass - 2mm thickness
See-through case-back with K1 glass
Water resistance to: 50m/5ATM

MOVEMENT
Automatic movement NH35A manufactured by Seiko
Mechanical with automatic winding with ball bearing (Bi-directional)
Rotor with "Côte de Genève" decoration
Caliber: 12'''
Frequency: 21'600 vibrations/hour (3Hz.)
Jewels: 24
Power reserve: up to 41 hours
Quick date correction
Functions: Hours, minutes, central seconds, date calendar

DIAL
British Green dial with "sunray" finish
Polished stainless steel applied indexes in arrow shape
Double applied indexes at 12 o'clock & white small lines (minutes indication)

HANDS
Polished rhodium-plated Dauphine style Hour & Minutes hands
Polished rhodium-plated central seconds hand
Date window positioned at 6 o'clock

STRAP
Interchangeable British Green stitched NATO nylon strap - length: 245mm / width: 20 mm - special NATO strap with moveable loop
Polished 316L stainless steel pin buckle & Loop

BRISTON

Clubmaster ICONIC

Automatic HMS Date
19640.PS.I.11.NG
NEW PRODUCT SEPTEMBER 2019

CASE
Size: 40 x 40 mm
Dial opening: 32,15 mm
Thickness: 11,70 mm
Full mirror-polished 316L Stainless Steel case
Polished stainless steel crown in trapezium shape engraved with BRISTON blazon
Ultra-resistant sapphire glass - 2mm thickness
See-through case-back with K1 glass
Water resistance to: 50m/5ATM

MOVEMENT
Automatic movement NH35A manufactured by Seiko
Mechanical with automatic winding with ball bearing (Bi-directional)
Rotor with "Côte de Genève" decoration
Caliber: 12'''
Frequency: 21'600 vibrations/hour (3Hz.)
Jewels: 24
Power reserve: up to 41 hours
Quick date correction
Functions: Hours, minutes, central seconds, date calendar

DIAL
Grey with sunray finish
Polished stainless steel applied indexes in arrow shape
Double applied indexes at 12 o'clock & white small lines (minutes indication)

HANDS
Polished rhodium-plated Dauphine style Hour & Minutes hands
Polished rhodium-plated central seconds hand
Date window positioned at 6 o'clock

STRAP
Interchangeable Grey stitched NATO nylon strap: water resistant & washable – length: 245mm / width: 20 mm
Special NATO strap with moveable loop
Exclusive BRISTON logo on 1st loop
Polished steel pin buckle & Loops

BRISTON

COLLECTION CLUBMASTER ICONIC

515$

Clubmaster ICONIC

HMS Open
Tortoise shell Acetate & PVD / Dials of colors with sunray finish
NATO strap
515$

485$

Clubmaster ICONIC

HMS Open
Tortoise shell case/ dials of colors with sunray finish
NATO strap
485$

455$

Clubmaster ICONIC

HMS Date
Full steel case / dials of colors with sunray finish
NATO strap
455$

CLUBMASTER ICONIC

BRISTON

Recommended public prices in USD

Clubmaster ICONIC

Automatic HMS OPEN
18740.PRA.TI.8.NBDX
NEW PRODUCT SEPTEMBER 2019

CASE
Size: 40 x 40 mm
Dial opening: 32,15 mm
Thickness: 11,70 mm
Italian tortoise shell Acetate: handmade polished finish
Lugs / Bezel / Crown / screw-down Back: polished 316L stainless steel with rose gold PVD treatment
Rose gold PVD crown in trapezium shape engraved with BRISTON blazon
Ultra-resistant sapphire glass - 2mm thickness
See-through case-back with K1 glass
Water resistance to: 50m/5ATM

MOVEMENT
Automatic movement NH38A manufactured by Seiko
Mechanical with automatic winding with ball bearing (Bi-directional)
Rotor with "Côte de Genève" decoration
Caliber: 12'''
Frequency: 21'600 vibrations/hour (3Hz.)
Jewels: 24
Power reserve: up to 41 hours
Functions: Hours, minutes, central seconds, opening on balance wheel at 9 o'clock

DIAL
Dark red dial with a "sunray" finishing
Polished Rose gold-plated applied indexes in arrow shape
Double applied indexes at 12 o'clock & white small lines (minutes indication))
Opening with diamond-cut bevel at 9 o'clock

HANDS
Polished Rose gold-plated Dauphine style Hour & Minutes hands
Polished Rose gold-plated central seconds hand

STRAP
Interchangeable Burgundy stitched NATO nylon strap - length: 245mm / width: 20 mm - special NATO strap with moveable loop
Polished 316L stainless steel with rose gold PVD treatment pin buckle & Loop

BRISTON

Clubmaster ICONIC

Automatic HMS OPEN
18740.PYA.TI.9.NNB
NEW PRODUCT SEPTEMBER 2019

CASE
Size: 40 x 40 mm
Dial opening: 32,15 mm
Thickness: 11,70 mm
Italian tortoise shell Acetate: handmade polished finish
Lugs / Bezel / Crown / screw-down Back: polished 316L stainless steel with yellow gold PVD treatment
Yellow gold PVD crown in trapezium shape engraved with BRISTON blazon
Ultra-resistant sapphire glass - 2mm thickness
See-through case-back with K1 glass
Water resistance to: 50m/5ATM

MOVEMENT
Automatic movement NH38A manufactured by Seiko
Mechanical with automatic winding with ball bearing (Bi-directional)
Rotor with "Côte de Genève" decoration
Caliber: 12'''
Frequency: 21'600 vibrations/hour (3Hz.)
Jewels: 24
Power reserve: up to 41 hours
Functions: Hours, minutes, central seconds, opening on balance wheel at 9 o'clock

DIAL
Blue dial with a "sunray" finishing
Polished Yellow gold-plated applied indexes in arrow shape
Double applied indexes at 12 o'clock & white small lines (minutes indication)
Opening with diamond-cut bevel at 9 o'clock

HANDS
Polished yellow gold-plated Dauphine style Hour & Minutes hands
Polished yellow gold-plated central seconds hand

STRAP
Interchangeable Navy Blue stitched NATO nylon strap - length: 245mm / width: 20 mm - special NATO strap with moveable loop
Polished 316L stainless steel with yellow gold PVD treatment pin buckle & Loop

BRISTON

Clubmaster ICONIC

Automatic HMS OPEN
18740.PYA.TI.10.NBG
NEW PRODUCT SEPTEMBER 2019

CASE
Size: 40 x 40 mm
Dial opening: 32,15 mm
Thickness: 11,70 mm
Italian tortoise shell Acetate: handmade polished finish
Lugs / Bezel / Crown / screw-down Back: polished 316L stainless steel with yellow gold PVD treatment
Yellow gold PVD crown in trapezium shape engraved with BRISTON blazon
Ultra-resistant sapphire glass - 2mm thickness
See-through case-back with K1 glass
Water resistance to: 50m/5ATM

MOVEMENT
Automatic movement NH38A manufactured by Seiko
Mechanical with automatic winding with ball bearing (Bi-directional)
Rotor with "Côte de Genève" decoration
Caliber: 12'''
Frequency: 21'600 vibrations/hour (3Hz.)
Jewels: 24
Power reserve: up to 41 hours
Functions: Hours, minutes, central seconds, opening on balance wheel at 9 o'clock

DIAL
British Green dial with a "sunray" finishing
Polished Yellow gold-plated applied indexes in arrow shape
Double applied indexes at 12 o'clock & white small lines (minutes indication)
Opening with diamond-cut bevel at 9 o'clock

HANDS
Polished yellow gold-plated Dauphine style Hour & Minutes hands
Polished yellow gold-plated central seconds hand

STRAP
Interchangeable British Green stitched NATO nylon strap - length: 245mm / width: 20 mm - special NATO strap with moveable loop
Polished 316L stainless steel with yellow gold PVD treatment pin buckle & Loop

BRISTON

Clubmaster ICONIC

Automatic HMS OPEN
18740.PRA.TI.11.NG
NEW PRODUCT SEPTEMBER 2019

CASE
Size: 40 x 40 mm
Dial opening: 32,15 mm
Thickness: 11,70 mm
Italian tortoise shell Acetate: handmade polished finish
Lugs / Bezel / Crown / screw-down Back: polished 316L stainless steel with rose gold PVD treatment
Rose gold PVD crown in trapezium shape engraved with BRISTON blazon
Ultra-resistant sapphire glass - 2mm thickness
See-through case-back with K1 glass
Water resistance to: 50m/5ATM

MOVEMENT
Automatic movement NH38A manufactured by Seiko
Mechanical with automatic winding with ball bearing (Bi-directional)
Rotor with "Côte de Genève" decoration
Caliber: 12'''
Frequency: 21'600 vibrations/hour (3Hz.)
Jewels: 24
Power reserve: up to 41 hours
Functions: Hours, minutes, central seconds, opening on balance wheel at 9 o'clock

DIAL
Grey dial with a "sunray" finishing
Polished Rose gold-plated applied indexes in arrow shape
Double applied indexes at 12 o'clock & white small lines (minutes indication))
Opening with diamond-cut bevel at 9 o'clock

HANDS
Polished Rose gold-plated Dauphine style Hour & Minutes hands
Polished Rose gold-plated central seconds hand

STRAP
Interchangeable Grey stitched NATO nylon strap - length: 245mm / width: 20 mm - special NATO strap with moveable loop
Polished 316L stainless steel with rose gold PVD treatment pin buckle & Loop

BRISTON

CLUBMASTER
ICONIC *GOLD*

NEW PRODUCTS
SEPTEMBER 2019

BRISTON

LAUNCH PLAN SEPTEMBER 2019

CLUBMASTER ICONIC

Acetate & PVD gold treatment

ICONIC DATE

ICONIC OPEN

September 2019

4 references

September — October

BRISTON

Clubmaster ICONIC

Automatic HMS Date
19640.PRA.TI.1.LVCH
NEW PRODUCT SEPTEMBER 2019

CASE
Size: 40 x 40 mm
Dial opening: 32,15 mm
Thickness: 11,70 mm
Italian tortoise shell Acetate: handmade polished finish
Lugs / Bezel / Crown / screw-down Back: polished 316L stainless steel with rose gold PVD treatment
Rose gold PVD crown in trapezium shape engraved with BRISTON blazon
Ultra-resistant sapphire glass - 2mm thickness
See-through case-back with K1 glass
Water resistance to: 50m/5ATM

MOVEMENT
Automatic movement NH35A manufactured by Seiko
Mechanical with automatic winding with ball bearing (Bi-directional)
Rotor with "Côte de Genève" decoration
Caliber: 12'''
Frequency: 21'600 vibrations/hour (3Hz.)
Jewels: 24
Power reserve: up to 41 hours
Quick date correction
Functions: Hours, minutes, central seconds, date calendar

DIAL
Black semi-glossy
Polished Rose gold-plated applied indexes in arrow shape
Double applied indexes at 12 o'clock & white small lines (minutes indication)

HANDS
Polished Rose gold-plated Dauphine style Hour & Minutes hands
Polished Rose gold-plated central seconds hand
Date window positioned at 6 o'clock

STRAP
Exclusive VINTAGE Black carbon Calfskin Leather strap: genuine leather with black stitching
Traditional & interchangeable 2-part strap with pins system to remove the strap
Length: 75mm/115mm
Width: 20 mm
Leather loop - BRISTON engraving on the rose gold PVD pin buckle

BRISTON

Clubmaster ICONIC

Automatic HMS Date
19640.PRA.TI.2.LVC
NEW PRODUCT SEPTEMBER 2019

CASE
Size: 40 x 40 mm
Dial opening: 32,15 mm
Thickness: 11,70 mm
Italian tortoise shell Acetate: handmade polished finish
Lugs / Bezel / Crown / screw-down Back: polished 316L stainless steel with rose gold PVD treatment
Rose gold PVD crown in trapezium shape engraved with BRISTON blazon
Ultra-resistant sapphire glass - 2mm thickness
See-through case-back with K1 glass
Water resistance to: 50m/5ATM

MOVEMENT
Automatic movement NH35A manufactured by Seiko
Mechanical with automatic winding with ball bearing (Bi-directional)
Rotor with "Côte de Genève" decoration
Caliber: 12'''
Frequency: 21'600 vibrations/hour (3Hz.)
Jewels: 24
Power reserve: up to 41 hours
Quick date correction
Functions: Hours, minutes, central seconds, date calendar

DIAL
White silvered semi-glossy
Polished Rose gold-plated applied indexes in arrow shape
Double applied indexes at 12 o'clock & white small lines (minutes indication)

HANDS
Polished Rose gold-plated Dauphine style Hour & Minutes hands
Black central seconds hand
Date window positioned at 6 o'clock

STRAP
Exclusive VINTAGE Black carbon Calfskin Leather strap: genuine leather with black stitching
Traditional & interchangeable 2-part strap with pins system to remove the strap
Length: 75mm/115mm
Width: 20 mm
Leather loop - BRISTON engraving on the rose gold PVD pin buckle

BRISTON

Clubmaster ICONIC

Automatic HMS OPEN
18740.PRA.TI.1.LVCH
NEW PRODUCT SEPTEMBER 2019

CASE
Size: 40 x 40 mm
Dial opening: 32,15 mm
Thickness: 11,70 mm
Italian tortoise shell Acetate: handmade polished finish
Lugs / Bezel / Crown / screw-down Back: polished 316L stainless steel with rose gold PVD treatment
Rose gold PVD crown in trapezium shape engraved with BRISTON blazon
Ultra-resistant sapphire glass - 2mm thickness
See-through case-back with K1 glass
Water resistance to: 50m/5ATM

MOVEMENT
Automatic movement NH38A manufactured by Seiko
Mechanical with automatic winding with ball bearing (Bi-directional)
Rotor with "Côte de Genève" decoration
Caliber: 12'''
Frequency: 21'600 vibrations/hour (3Hz.)
Jewels: 24
Power reserve: up to 41 hours
Functions: Hours, minutes, central seconds, opening on balance wheel at 9 o'clock

DIAL
Black semi-glossy
Polished Rose gold-plated applied indexes in arrow shape
Double applied indexes at 12 o'clock & white small lines (minutes indication))
Opening with diamond-cut bevel at 9 o'clock

HANDS
Polished Rose gold-plated Dauphine style Hour & Minutes hands
Polished Rose gold-plated central seconds hand

STRAP
Exclusive VINTAGE Black carbon Calfskin Leather strap: genuine leather with black stitching
Traditional & interchangeable 2-part strap with pins system to remove the strap
Length: 75mm/115mm
Width: 20 mm
Leather loop - BRISTON engraving on the rose gold PVD pin buckle

BRISTON

Clubmaster ICONIC

Automatic HMS OPEN
18740.PRA.TI.2.LVC
NEW PRODUCT SEPTEMBER 2019

CASE
Size: 40 x 40 mm
Dial opening: 32,15 mm
Thickness: 11,70 mm
Italian tortoise shell Acetate: handmade polished finish
Lugs / Bezel / Crown / screw-down Back: polished 316L stainless steel with rose gold PVD treatment
Rose gold PVD crown in trapezium shape engraved with BRISTON blazon
Ultra-resistant sapphire glass - 2mm thickness
See-through case-back with K1 glass
Water resistance to: 50m/5ATM

MOVEMENT
Automatic movement NH38A manufactured by Seiko
Mechanical with automatic winding with ball bearing (Bi-directional)
Rotor with "Côte de Genève" decoration
Caliber: 12'''
Frequency: 21'600 vibrations/hour (3Hz.)
Jewels: 24
Power reserve: up to 41 hours
Functions: Hours, minutes, central seconds, opening on balance wheel at 9 o'clock

DIAL
White-silvered semi-glossy
Polished Rose gold-plated applied indexes in arrow shape
Double applied indexes at 12 o'clock & white small lines (minutes indication))
Opening with diamond-cut bevel at 9 o'clock

HANDS
Polished Rose gold-plated Dauphine style Hour & Minutes hands
Black central seconds hand

STRAP
Exclusive VINTAGE Black carbon Calfskin Leather strap: genuine leather with black stitching
Traditional & interchangeable 2-part strap with pins system to remove the strap
Length: 75mm/115mm
Width: 20 mm
Leather loop - BRISTON engraving on the rose gold PVD pin buckle

BRISTON

COLLECTION CLUBMASTER ICONIC

560$

AUTOMATIC
HMS OPEN

Clubmaster ICONIC

Automatic HMS OPEN
40mm case in tortoise shell acetate & Rose gold PVD
2-part Vintage leather strap
560$

520$

AUTOMATIC
HMS DATE

Clubmaster ICONIC

Automatic HMS Date
40mm case in tortoise shell acetate & Rose gold PVD
2-part Vintage leather strap
520$

CLUBMASTER ICONIC

BRISTON

Recommended public retail price in USD

COLLECTION CLUBMASTER ICONIC

560$

540$

530$

520$

500$

490$

485$

455$

Automatic HMS Date
Tortoise acetate & Rose gold PVD
2-part Vintage leather strap
520$

Automatic HMS Open
40mm Tortoise acetate case
2-part Vintage leather strap
530$

Automatic HMS Open
40mm polished steel case
2-part Vintage leather strap
540$

Automatic HMS OPEN
Tortoise acetate & Rose gold PVD
2-part Vintage leather strap
560$

Automatic HMS Date
40mm Tortoise acetate case
2-part Vintage leather strap
490$

Automatic HMS Date
40mm polished steel case
2-part Vintage leather strap
500$

Automatic HMS Open
Dials of colors / sunray finish
NATO strap
485$

Automatic HMS Date
Dials of colors with sunray finish
NATO strap
455$

NEW CLUBMASTER ICONIC 2019

BRISTON

Recommended public prices in USD

COMPETITION

CLASSIC WATCHES
AUTOMATIC MOVEMENT

1700$
1400$
1300$
1100$
950$
650$
500$
390$

LONGINES
Flagship Heritage
Caliber L615
38,50mm – sapphire glass
1675$

MEISTERSINGER
Neo Plus
Movement ETA 2824-2
40mm – sapphire glass
1400$ (around)

MARCHLAB
AM1 AUTOMATIC FOREST
Automatic Miyota 9015
40mm – sapphire glass
1300$ (around)

RAYMOND WEIL
Maestro Gent's Auto
Movement RW4200
39,50mm - sapphire glass
1125$ (around)

FREDERIQUE CONSTANT
Classics Index Automatic
FC-303 caliber
40mm case – sapphire glass
950$

HAMILTON
Jazzmaster Open Heart Auto
Movement ETA 2824-2
40mm – sapphire glass
925$

JUNGHANS
FORM A
Caliber J800.2
39,3mm – sapphire glass
920$

JUNKERS
6050-5 Bauhaus
Movement ETA 2824-2
40mm - domed Hesalite glass
550$

LIP
Himalaya Open Heart
Automatic Miyota 82S5
40mm - Sapphire glass
560$

Clubmaster ICONIC
Automatic movements
NH35& NH38
40mm case – Sapphire glass
455$ - 485$

SEIKO
Collection Presage
Automatic Limited Edition
Seiko 4R365
40,5mm - Hardlex mineral
425$

TISSOT
EVERYTIME SWISSMATIC
Movement Auto Swiss
40mm – sapphire glass
395$

Public prices with taxes

www.briston-watches.com